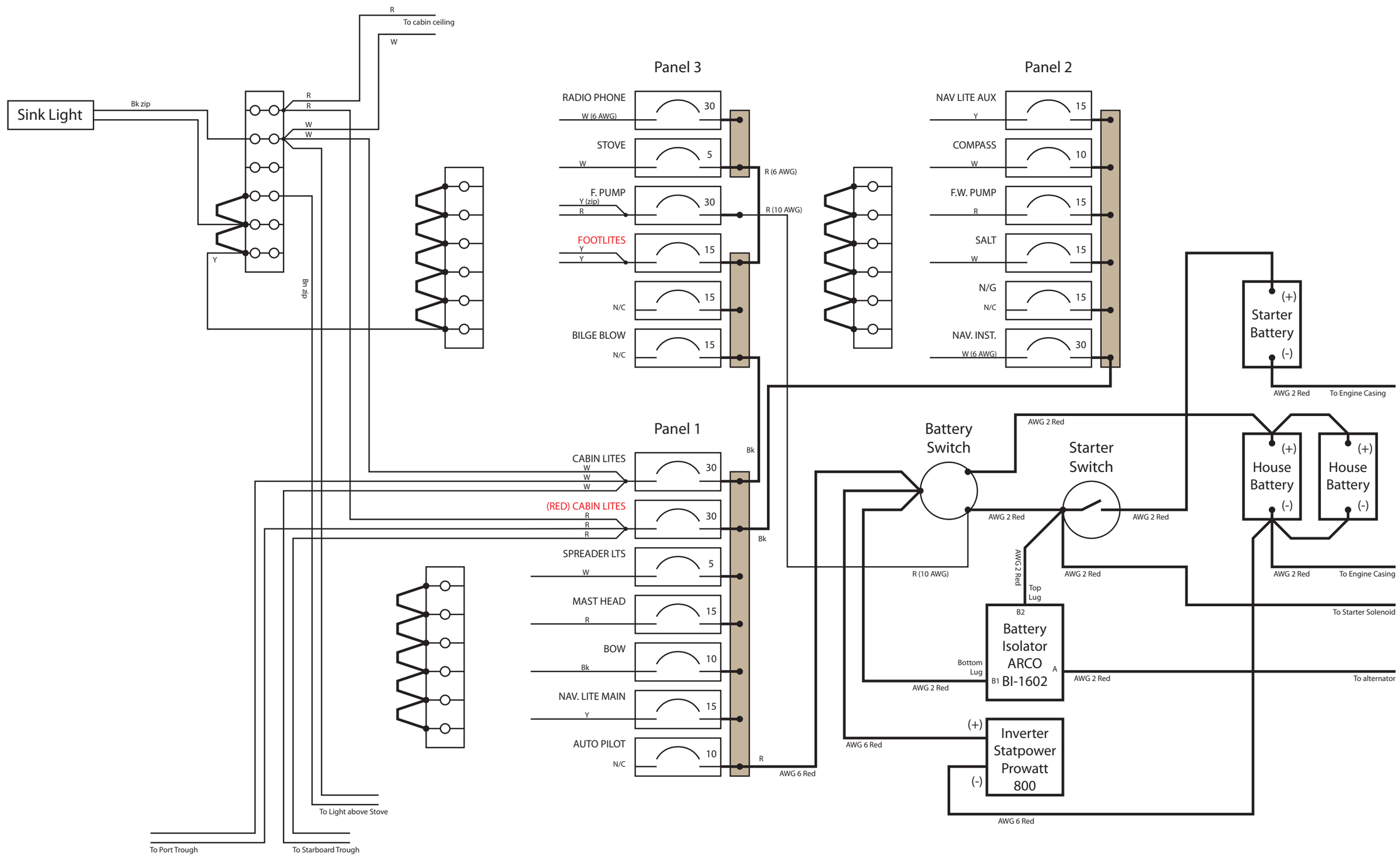
Sink Light
Bk zip
R
To cabin ceiling
W
R
R
W
W
Y
Bk zip
Panel 3
RADIO PHONE
W (6 AWG)
30
STOVE
W
5
F. PUMP
Y (zip)
R
30
FOOTLITES
Y
Y
15
N/C
15
BILGE BLOW
N/C
15
R (6 AWG)
R (10 AWG)
Panel 2
NAV LITE AUX
Y
15
COMPASS
W
10
F.W. PUMP
R
15
SALT
W
15
N/G
N/C
15
NAV. INST.
W (6 AWG)
30
Panel 1
CABIN LITES
W
W
W
30
(RED) CABIN LITES
R
R
R
30
SPREADER LTS
W
5
MAST HEAD
R
15
BOW
Bk
10
NAV. LITE MAIN
Y
15
AUTO PILOT
N/C
10
Bk
Bk
R
AWG 6 Red
To Light above Stove
To Port Trough
To Starboard Trough
Battery Switch
Starter Switch
AWG 2 Red
AWG 2 Red
AWG 2 Red
R (10 AWG)
AWG 2 Red
Top Lug
B2
Battery Isolator ARCO BI-1602
Bottom Lug
B1
A
AWG 2 Red
AWG 2 Red
To alternator
(+)
Inverter Statpower Prowatt 800
(-)
AWG 6 Red
AWG 6 Red
(+)
Starter Battery
(-)
AWG 2 Red
To Engine Casing
(+)
House Battery
(-)
(+)
House Battery
(-)
AWG 2 Red
To Engine Casing
To Starter Solenoid